Abloy-EL402

Electromechanical Lock

- Double action bolt
- Bolt deadlocks when door closes
- Bolt collapses into lockcase as door is opened (push or pull)
- Key/thumbturn override at all times
- Suitable for horizontal installation
- Non-handed
- Steel trigger and deadbolt

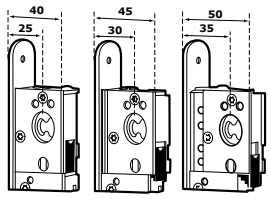

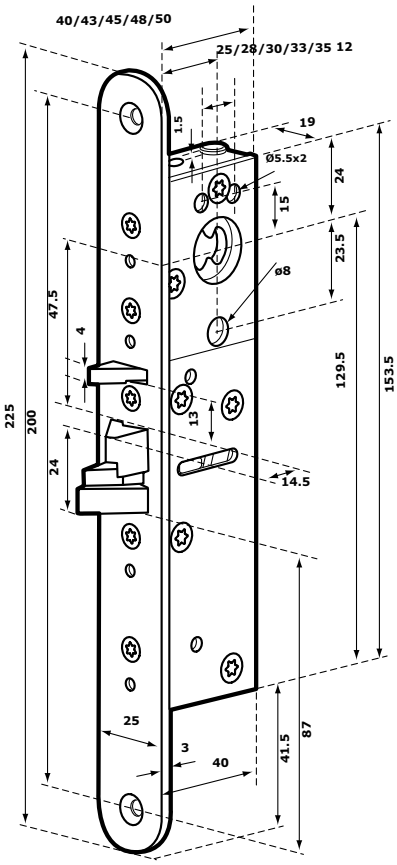

TECHNICAL SPECIFICATION	EL402	EL402 F/UN
Operating voltage		
+15%, -10%	12V DC stabilised	12V DC stabilised
±15%	24V DC stabilised	24V DC stabilised
Current max		
12V DC	0.480mA	0.480mA
24V DC	0.240mA	0.240mA
Temperature (ºC)	-20 to +60	-20 to +60
Backset (mm)		
Standard	25	25
Special	30 or 35	30 or 35
Forend finish	Polished Chrome	Polished Chrome